STEVES AND SONS
203 Humble Ave.
San Antonio, TX 78225

Digitally signed by Lyndon F Schmidt
Date: 2025.10.15 10:39:20 -04'00'

L. F. SCHMIDT LICENSE No. 43409 STATE OF FLORIDA PROFESSIONAL ENGINEER

This item has been digitally signed and sealed by **L. F. Schmidt, P.E.** on the date adjacent to the seal.

Printed copies of this document are not considered signed and sealed and the signature must be verified on any electronic copies.

THIS PRODUCT APPROVAL IS VALID ONLY FOR THE STATE OF FLORIDA

"REGENCY SERIES" ARCH TOP

DIRECT GLAZED FIBERGLASS DOOR SINGLE & DOUBLE

INSWING "NON-IMPACT"

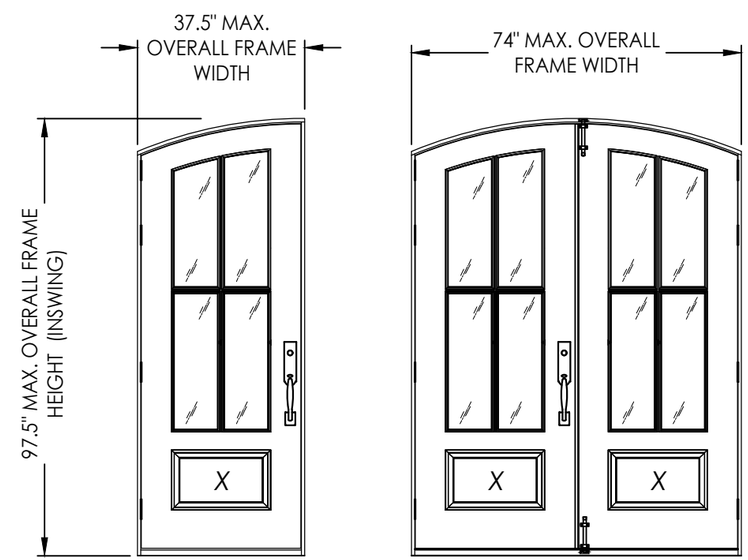

GENERAL NOTES

1. This product has been evaluated and is in compliance with the 8th Edition (2023) Florida Building Code (FBC) structural requirements excluding the "High Velocity Hurricane Zone" (HVHZ).
2. Product anchors shall be as listed and spaced as shown on details. Anchor embedment to base material shall be beyond wall dressing or stucco.
3. When used in areas requiring wind borne debris protection this product is required to be protected with an impact resistant covering that complies with FBC Sections 1609.1.2 & R301.2.1.2 of the FBC.
4. For 2x stud framing construction, anchoring of these units shall be the same as that shown for 2x buck masonry construction.
5. Site conditions that deviate from the details of this drawing require further engineering analysis by a licensed engineer or registered architect.

CONFIGURATION	MAX. FRAME DIMENSION	DESIGN PRESSURE (PSF) INSWING	
		POSITIVE	NEGATIVE
X	37.5" x 97.0"	+50.0	-55.0
XX	74.0" x 97.0"	+50.0	-55.0

TABLE OF CONTENTS

SHEET #	DESCRIPTION	SHEET #	
1	Typical Elevations, Design Pressures & General Notes	6	Horizontal & Vertical Cross Sections
2	Door Panel Details	7	Buck Anchoring
3	Elevations	8	Frame Anchoring & Hardware Details
4	Horizontal & Vertical Cross Sections (2X Buck)	9	Bill of Materials & Components
5	Horizontal & Vertical Cross Sections (1X Buck)		

Documents Prepared By:
Lyndon F. Schmidt
P.E. No. 43409
RW BUILDING CONSULTANTS, INC.
P.O. Box 230, Valrico, FL 33595
Phone No.: 813.659.9197
FBPE Registry No. 9813

PRODUCT: STEVES & SONS FIBERGLASS DOOR

PART OR ASSEMBLY: TYPICAL ELEVATION, DESIGN PRESSURES & GENERAL NOTES

NO.	DATE	REVISIONS	BY

DATE: 10/08/25
SCALE: N.T.S.
DWG. BY: RW
CHK. BY: LFS
DRAWING NO.: FL-46124.1
SHEET 1 OF 9

© 2025 R.W. Building Consultants Inc.

Z:\2023 FBC Drawings\Steves & Sons\FL-46124\FL46124.1.dwg

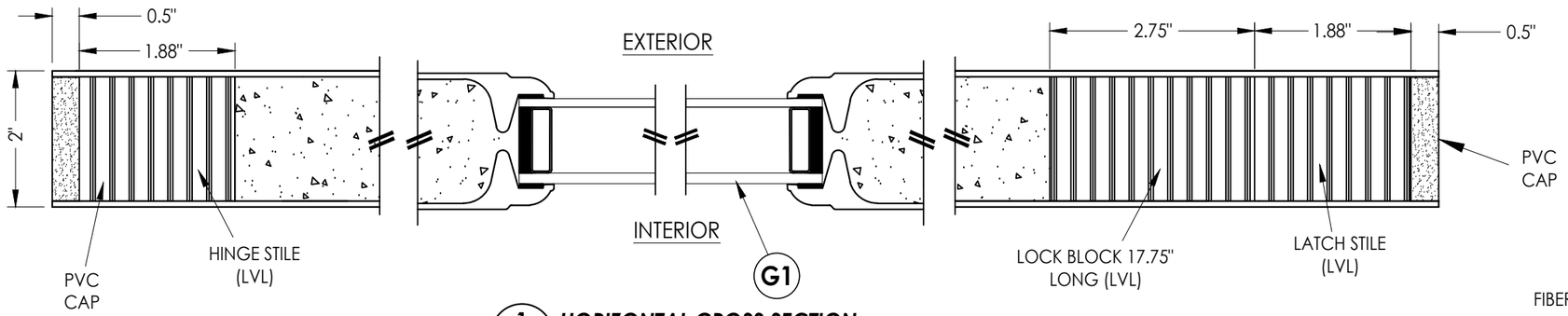

1/2 **HORIZONTAL CROSS SECTION**

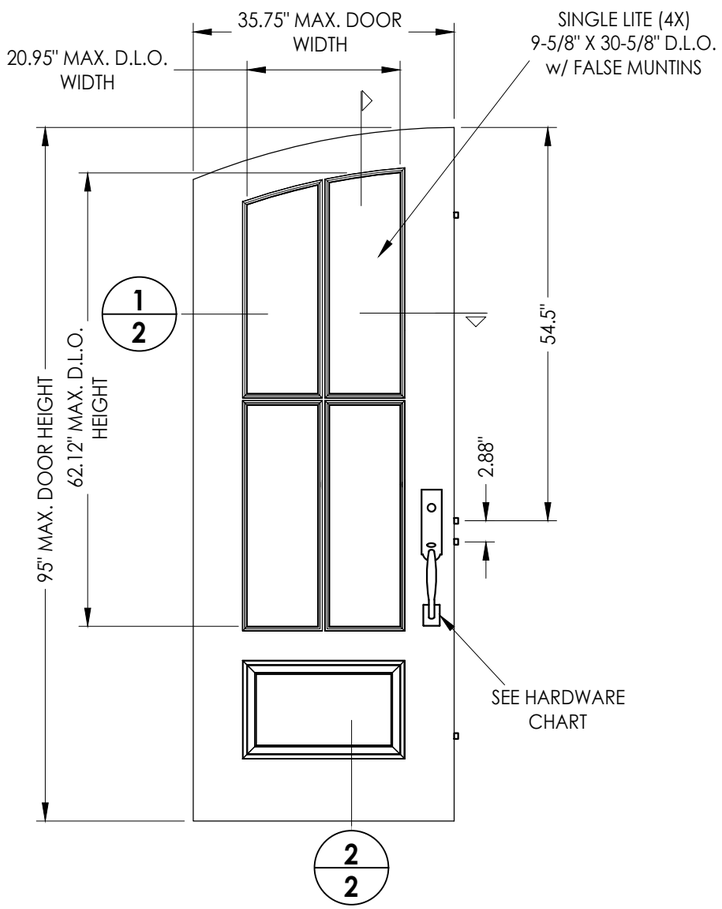

40 **FIBERGLASS DOOR PANEL**
STEVES & SONS - Fangda Regency Series

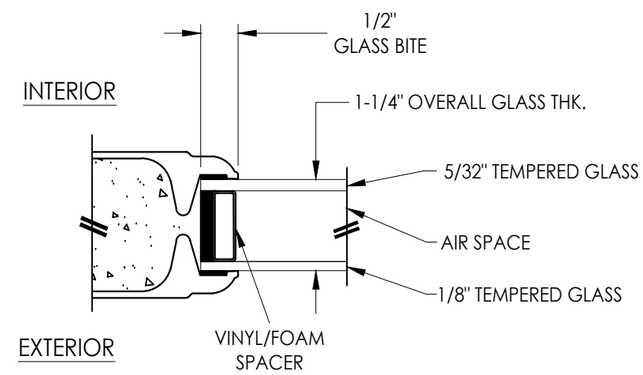

G1 **GLAZING DETAIL**
WEIER GLASS

HARDWARE TABLE	
MANUFACTURER	**MODEL**
SUNSHINE LOCKS	**MULTIPOINT LOCK: (3 PT.) SERIES 8000**
PRIME-LINE	**SURFACE BOLTS: MP4914 (8")**

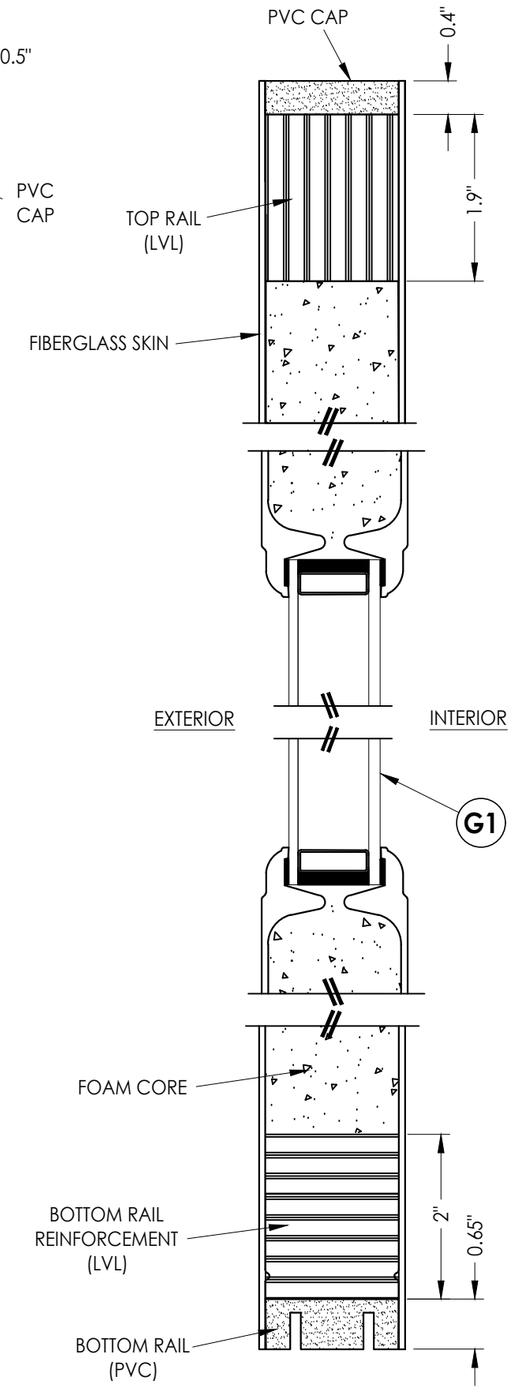

2/2 **VERTICAL CROSS SECTION**

FIBERGLASS DOOR SKIN: MIN. 0.080" THK.
CORE MATERIAL: POLYURETHANE FOAM (1.9 PCF MIN.)

Documents Prepared By:
Lyndon F. Schmidt
P.E. No. 43409
RW BUILDING CONSULTANTS, INC.
P.O. Box 230, Valrico, FL 33595
Phone No.: 813.659.9197
FBPE Registry No. 9813

PRODUCT: STEVES & SONS FIBERGLASS DOOR

PART OR ASSEMBLY: DOOR PANEL DETAILS

NO.	DATE	BY

REVISIONS

DATE: 10/08/25
SCALE: N.T.S.
DWG. BY: RW
CHK. BY: LFS
DRAWING NO.: FL-46124.1
SHEET 2 OF 9

© 2025 R.W. Building Consultants Inc.

Z:\2023 FBC Drawings\Steves & Sons\FL-46124\FL46124.1.dwg

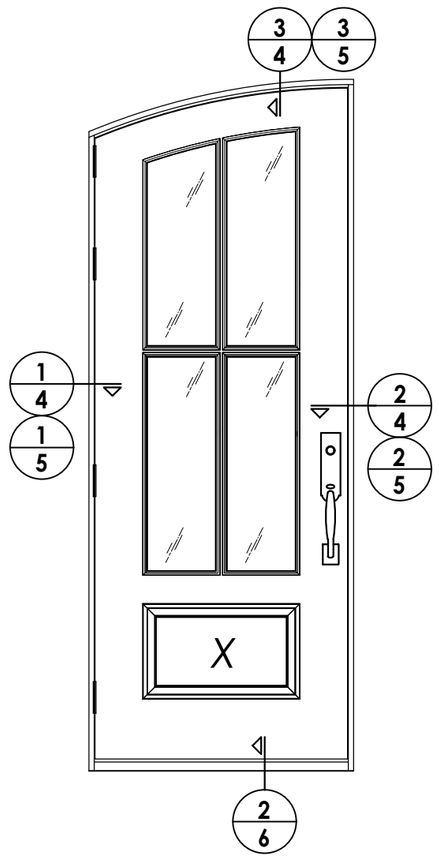

ELEVATION
X

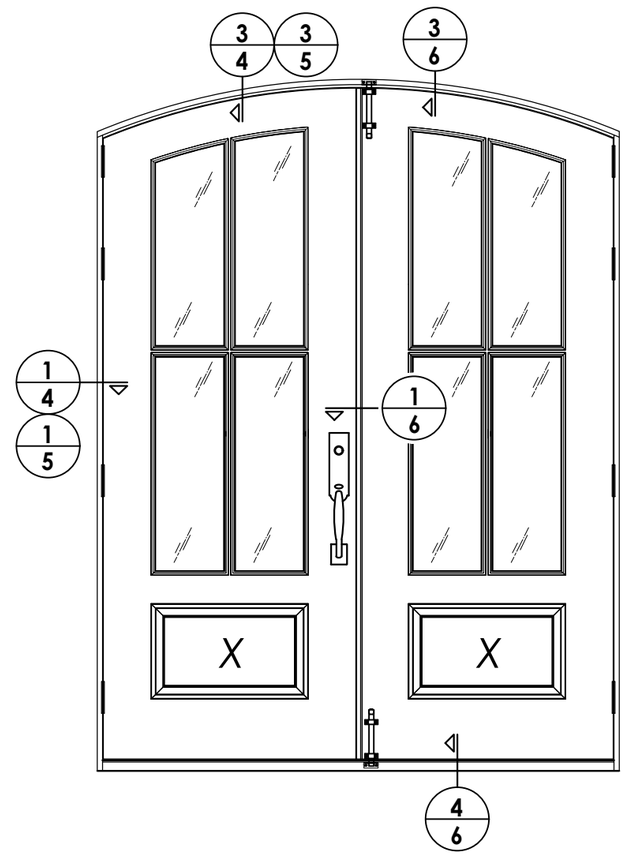

ELEVATION
XX

Documents Prepared By:

Lyndon F. Schmidt
P.E. No. 43409

RW BUILDING CONSULTANTS, INC.
P.O. Box 230, Valrico, FL 33595
Phone No.: 813.659.9197
FBPE Registry No. 9813

PRODUCT: STEVES & SONS FIBERGLASS DOOR

PART OR ASSEMBLY: ELEVATIONS

NO.	DATE	BY

REVISIONS

DATE: 10/08/25
SCALE: N.T.S.
DWG. BY: RW
CHK. BY: LFS
DRAWING NO.: FL-46124.1
SHEET 3 OF 9

© 2025 R.W. Building Consultants Inc.

Z:\2023 FBC Drawings\Steves & Sons\FL-46124\FL46124.1.dwg

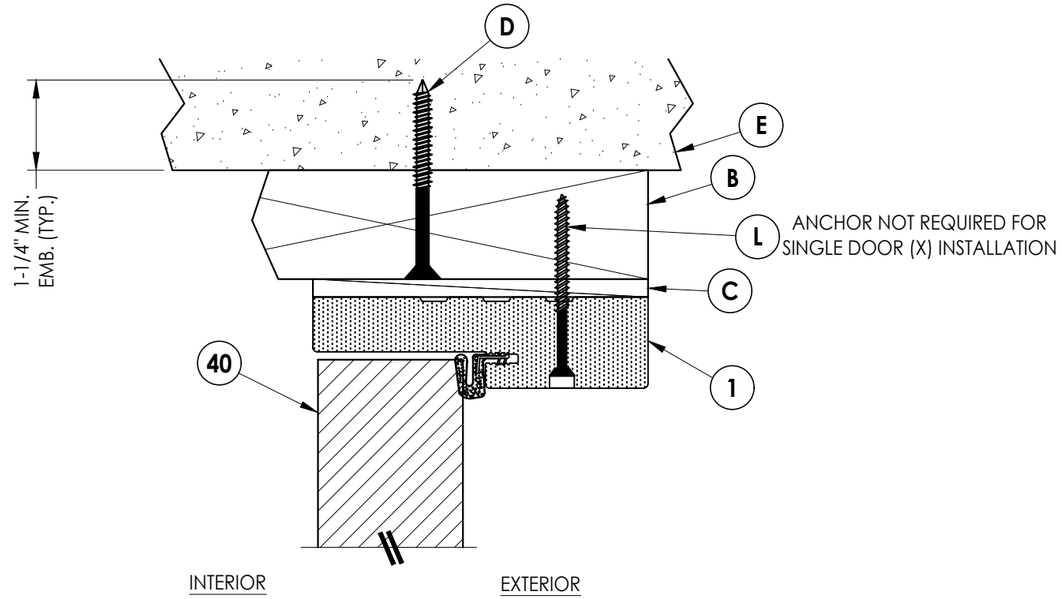

3/4 VERTICAL CROSS SECTION
Shown w/ 2X Buck
Inswing

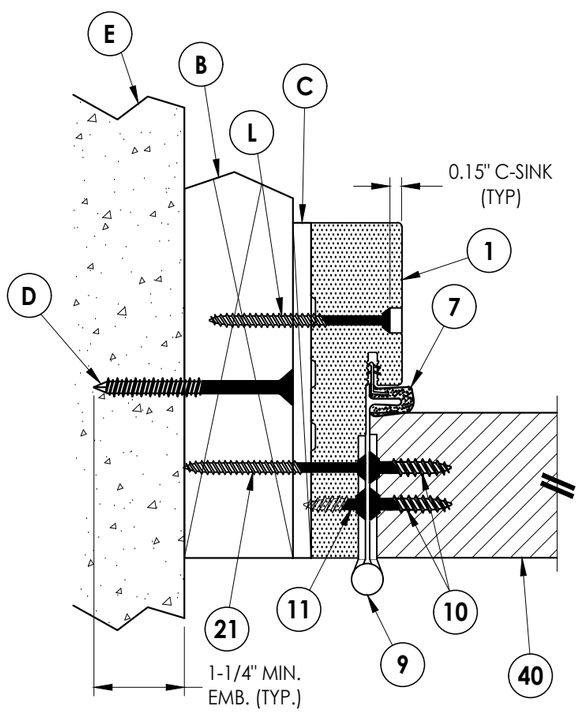

1/4 HORIZONTAL CROSS SECTION
Shown w/ 2X Buck
Inswing

EXTERIOR

INTERIOR

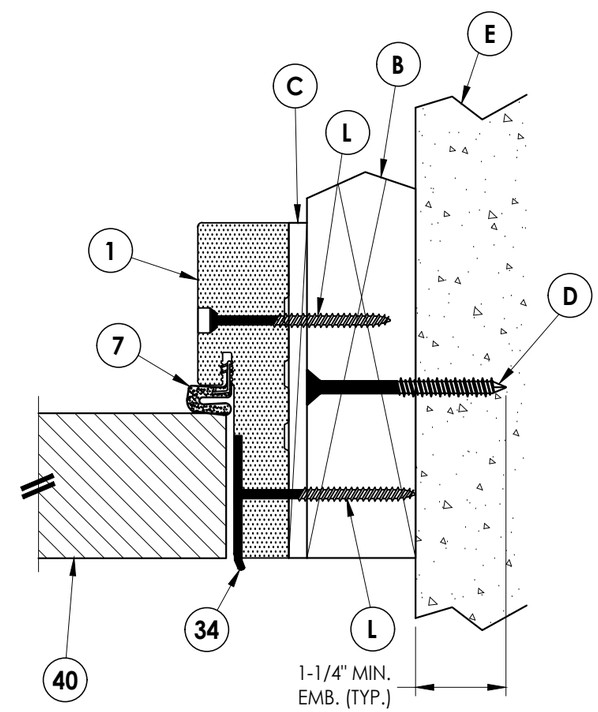

2/4 HORIZONTAL CROSS SECTION
Shown w/ 2X Buck
Inswing

Documents Prepared By:
Lyndon F. Schmidt
P.E. No. 43409

RW BUILDING CONSULTANTS, INC.
P.O. Box 230, Valrico, FL 33595
Phone No.: 813.659.9197
FBPE Registry No. 9813

PRODUCT: STEVES & SONS FIBERGLASS DOOR

PART OR ASSEMBLY: HORIZONTAL & VERTICAL CROSS SECTIONS (2X BUCK)

NO.	DATE	REVISIONS	BY

DATE: 10/08/25
SCALE: N.T.S.
DWG. BY: RW
CHK. BY: LFS
DRAWING NO.: FL-46124.1
SHEET 4 OF 9

© 2025 R.W. Building Consultants Inc.

Z:\2023 FBC Drawings\Steves & Sons\FL-46124\FL46124.1.dwg

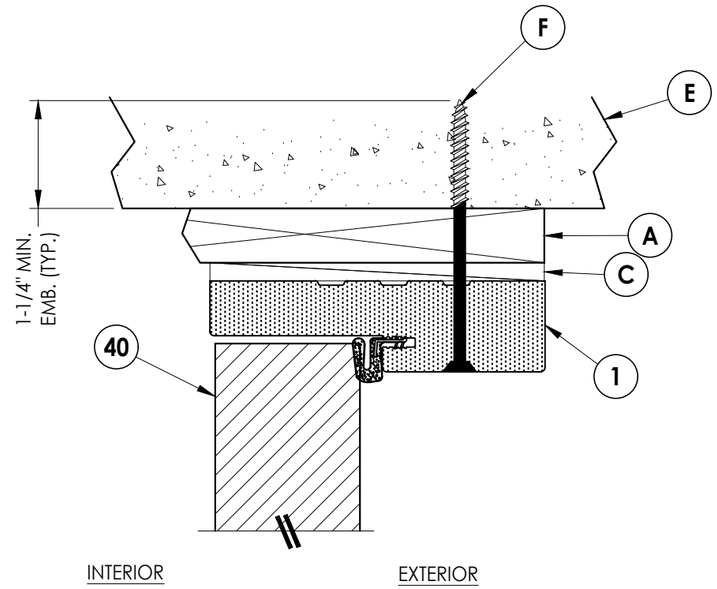

3/5 VERTICAL CROSS SECTION
Shown w/ 1X Buck
Inswing

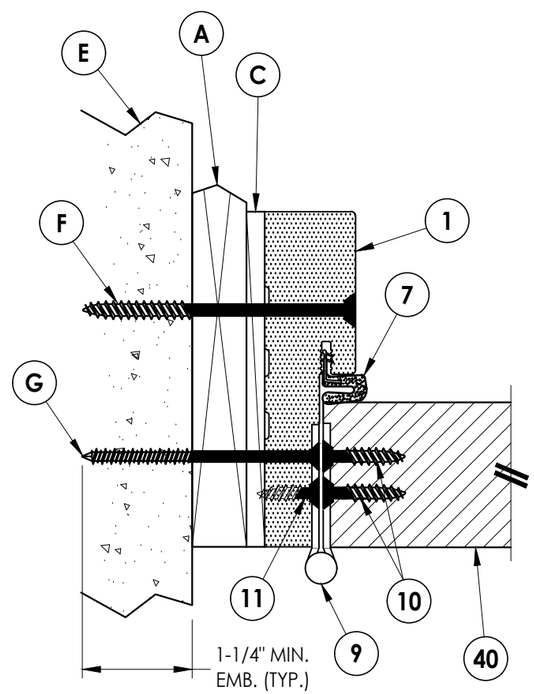

1/5 HORIZONTAL CROSS SECTION
Shown w/ 1X Buck
Inswing

EXTERIOR

INTERIOR

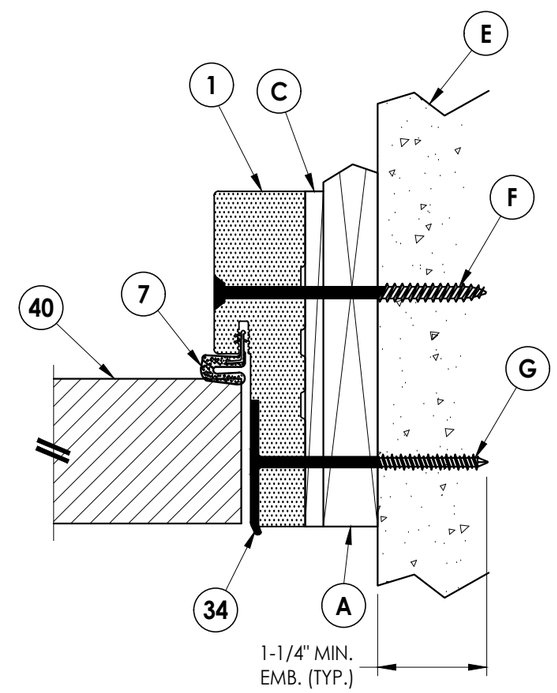

2/5 HORIZONTAL CROSS SECTION
Shown w/ 1X Buck
Inswing

Documents Prepared By:
Lyndon F. Schmidt
P.E. No. 43409
RW BUILDING CONSULTANTS, INC.
P.O. Box 230, Valrico, FL 33595
Phone No.: 813.659.9197
FBPE Registry No. 9813

PRODUCT: STEVES & SONS FIBERGLASS DOOR

PART OR ASSEMBLY: HORIZONTAL & VERTICAL CROSS SECTIONS (1X BUCK)

NO.	DATE	REVISIONS	BY

DATE: 10/08/25
SCALE: N.T.S.
DWG. BY: RW
CHK. BY: LFS
DRAWING NO.: FL-46124.1
SHEET 5 OF 9

© 2025 R.W. BUILDING CONSULTANTS INC.

Z:\2023 FBC Drawings\Steves & Sons\FL-46124\FL46124.1.dwg

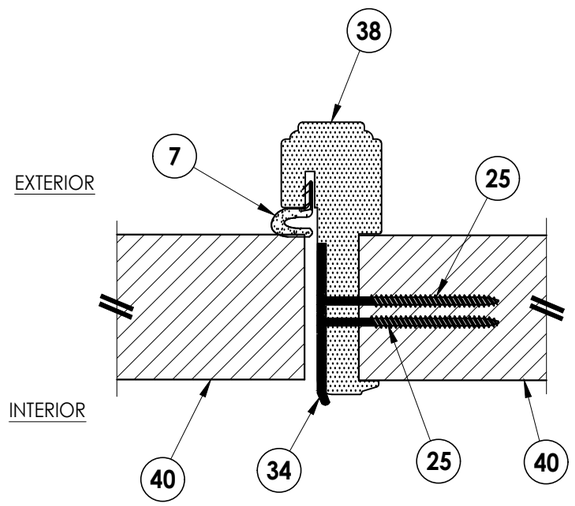

1/6 **HORIZONTAL CROSS SECTION**
Inswing

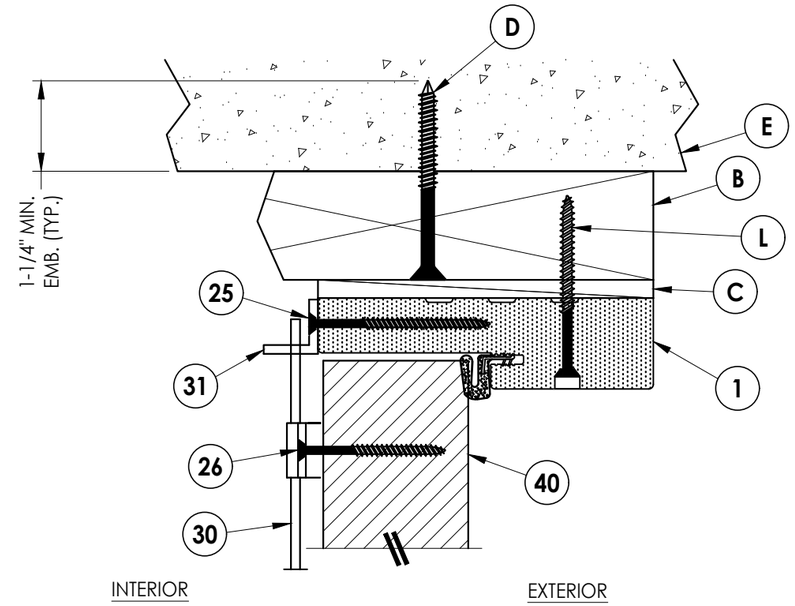

3/6 **VERTICAL CROSS SECTION**
Shown w/ 2X Buck
Inswing

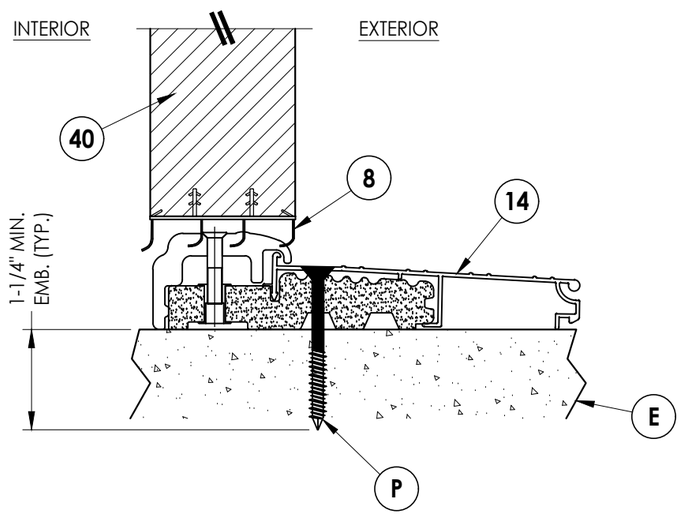

2/6 **VERTICAL CROSS SECTION**
Inswing Threshold

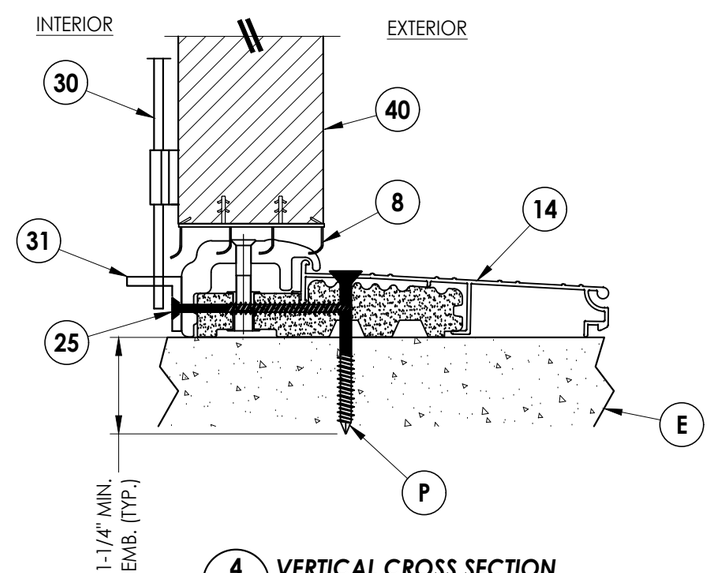

4/6 **VERTICAL CROSS SECTION**
Inswing Threshold

Documents Prepared By:
Lyndon F. Schmidt
P.E. No. 43409

RW BUILDING CONSULTANTS, INC.
P.O. Box 230, Valrico, FL 33595
Phone No.: 813.659.9197
FBPE Registry No. 9813

PRODUCT: STEVES & SONS FIBERGLASS DOOR

PART OR ASSEMBLY: HORIZONTAL & VERTICAL CROSS SECTIONS

NO.	DATE	REVISIONS	BY

DATE: 10/08/25
SCALE: N.T.S.
DWG. BY: RW
CHK. BY: LFS
DRAWING NO.: FL-46124.1
SHEET 6 OF 9

© 2025 R.W. Building Consultants Inc.

Z:\2023 FBC Drawings\Steves & Sons\FL-46124\FL46124.1.dwg

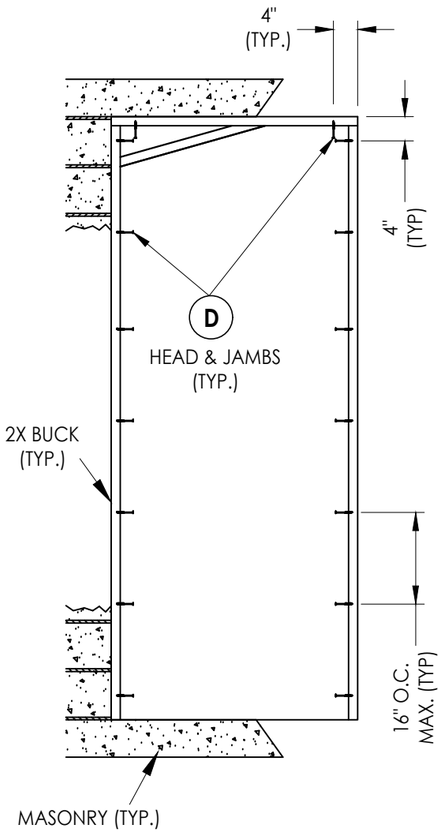

X

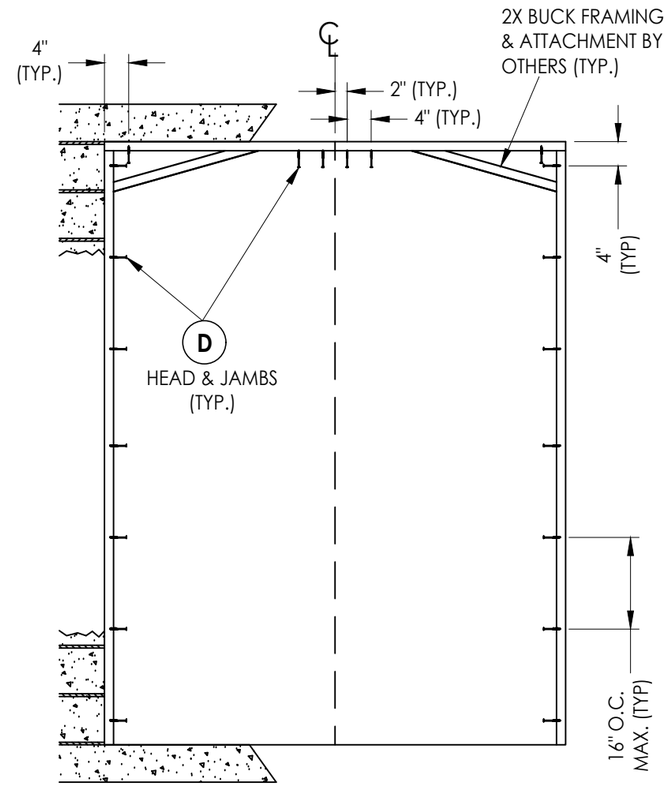

XX

2X BUCK ANCHORING

Documents Prepared By:
Lyndon F. Schmidt
P.E. No. 43409

RW BUILDING CONSULTANTS, INC.
P.O. Box 230, Valrico, FL 33595
Phone No.: 813.659.9197
FBPE Registry No. 9813

PRODUCT: STEVES & SONS FIBERGLASS DOOR

PART OR ASSEMBLY: BUCK ANCHORING

NO.	DATE	BY

REVISIONS

DATE: 10/08/25
SCALE: N.T.S.
DWG. BY: RW
CHK. BY: LFS
DRAWING NO.: FL-46124.1
SHEET 7 OF 9

© 2025 R.W. Building Consultants Inc.

Z:\2023 FBC Drawings\Steves & Sons\FL-46124\FL46124.1.dwg

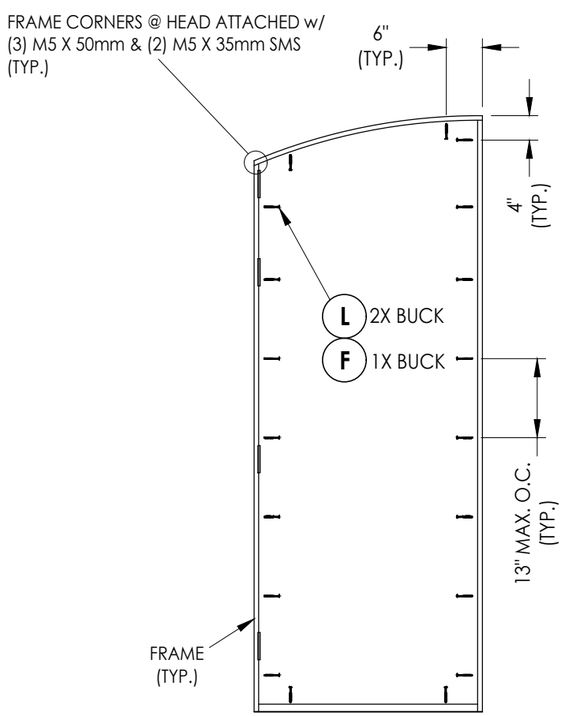

X

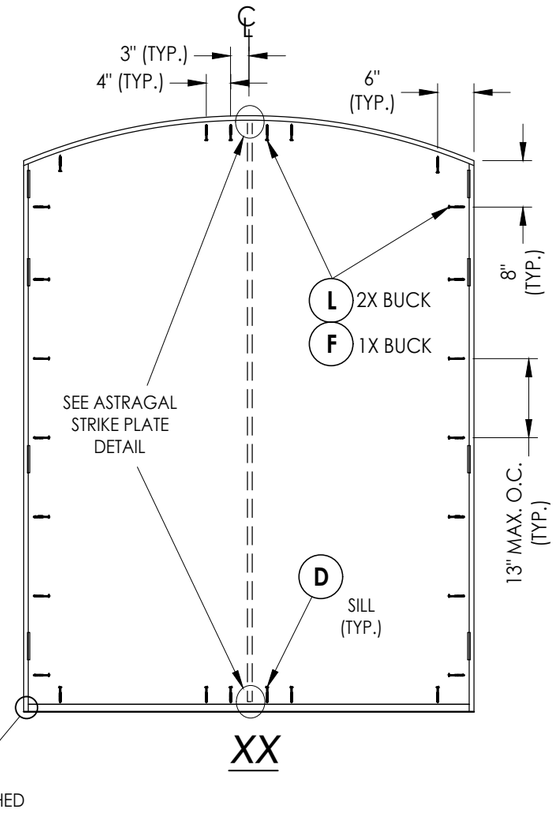

XX

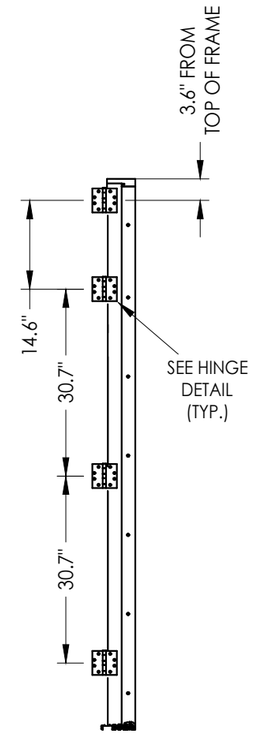

HINGE JAMB

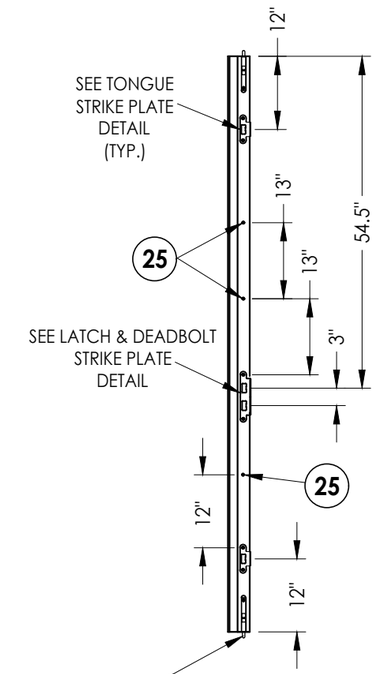

SLIDE BOLT (15/32" Ø X 1-3/16" LONG)
ATTACHED w/ (1) #8 X 2-1/2"
WOOD SCREW ON THE FACE PLUS (1) #8
X 1-1/2" WOOD SCREW AT THE END
(TYPICAL @ HEAD & SILL)

ASTRAGAL

FRAME ANCHORING

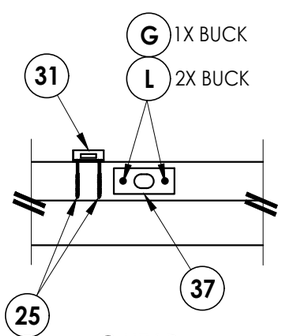

@ HEAD

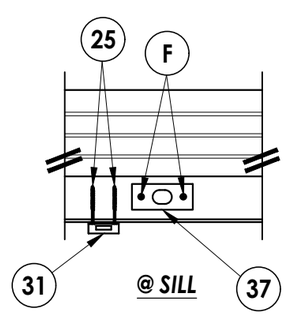

@ SILL

ASTRAGAL/SURFACE BOLT STRIKE PLATE DETAILS

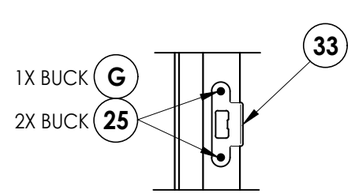

TONGUE STRIKE DETAIL
Multipoint Lock

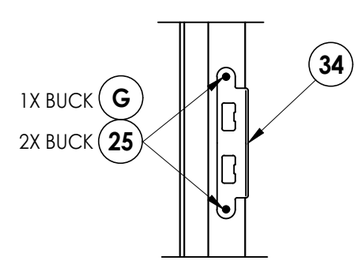

LATCH & DEADBOLT DETAIL
Multipoint Lock

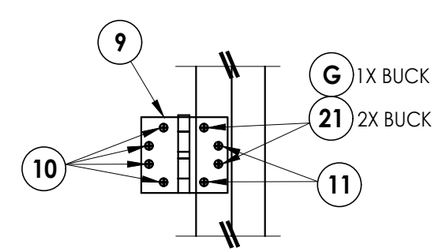

HINGE DETAIL
INSWING

HARDWARE DETAILS

Documents Prepared By:
Lyndon F. Schmidt
P.E. No. 43409

RW BUILDING CONSULTANTS, INC.
P.O. Box 230, Valrico, FL 33595
Phone No.: 813.659.9197
FBPE Registry No. 9813

PRODUCT: STEVES & SONS FIBERGLASS DOOR

PART OR ASSEMBLY: FRAME ANCHORING & HARDWARE DETAILS

NO.	DATE	REVISIONS	BY

DATE: 10/08/25
SCALE: N.T.S.
DWG. BY: RW
CHK. BY: LFS
DRAWING NO.: FL-46124.1
SHEET 8 OF 9

© 2025 R.W. Building Consultants Inc.

Z:\2023 FBC Drawings\Steves & Sons\FL-46124\FL46124.1.dwg

BILL OF MATERIALS

ITEM #	DESCRIPTION	MATERIAL
A	1X BUCK (G >= 0.42)	WOOD
B	2X BUCK (G >= 0.42)	WOOD
C	1/4" MAX. SHIM SPACE	-
D	1/4" X 2-3/4" PFH DeWALT OR ITW CONCRETE SCREW	STEEL
E	MASONRY - 3,000 PSI MIN. CONCRETE CONFORMING TO ACI 301 OR HOLLOW BLOCK CONFORMING TO ASTM C90	CONCRETE
F	1/4" X 3-3/4" PFH DeWALT OR ITW CONCRETE SCREW	STEEL
G	3/16" X 3-1/4" PFH ITW CONCRETE SCREW	STEEL
L	#10 X 2-1/2" PFH WOOD SCREW (1.15" MIN. EMB.)	STEEL
P	1/4" X 2-1/4" PFH DeWALT OR ITW CONCRETE SCREW	STEEL
1	COMPOSITE JAMB	COMP
7	WEATHERSTRIP	FOAM
8	DOOR SWEEP	VINYL
9	4-1/2" X 4-1/2" HINGE	STEEL
10	#12 X 1-1/4" PFH WOOD SCREW	STEEL
11	#12 X 3/4" PFH WOOD SCREW	STEEL
14	INSWING THRESHOLD	ALUM/COMP
21	#12 X 2-1/2" PFH WOOD SCREW	STEEL
25	#8 X 2-1/2" PFH WOOD SCREW	STEEL
26	#8 X 2" PH SMS	STEEL
30	8" SURFACE BOLTS (0.75" WIDE X 0.23" THICK STEEL)	STEEL
31	SURFACE BOLT STRIKE PLATE (INSWING)	STEEL
33	MULTIPOINT TONGUE STRIKE PLATE	STEEL
34	MULTIPOINT LATCH & DEADBOLT STRIKE PLATE	STEEL
37	ASTRAGAL STRIKE PLATE	STEEL
38	PVC ASTRAGAL	PVC
40	DOOR PANEL	-

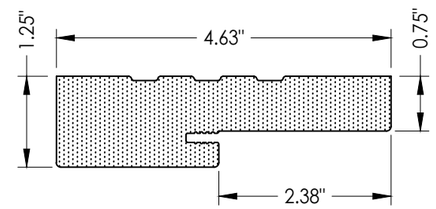

1 COMPOSITE JAMB

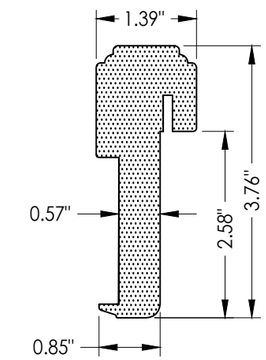

38 PVC ASTRAGAL

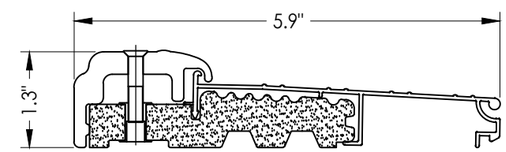

14 INSWING THRESHOLD

CONCRETE ANCHOR NOTES:

1. *Concrete anchor locations at the corners may be adjusted to maintain the min. edge distance to mortar joints.*
2. *Concrete anchor locations noted as "MAX. ON CENTER" must be adjusted to maintain the min. edge distance to mortar joints, additional concrete anchors may be required to ensure the "MAX. ON CENTER" dimension are not exceeded.*
3. *Concrete anchor table:*

ANCHOR TYPE	ANCHOR SIZE	MIN. EMBEDMENT	MIN. CLEARANCE TO MASONRY EDGE	MIN. CLEARANCE TO ADJACENT ANCHOR
ITW BUILDEX TAPCON®	3/16"	1-1/4"	3"	1-1/2"
	1/4"	1-1/4"	2"	4"
DeWALT ULTRACON®+	1/4"	1-1/4"	1"	4"

WOOD SCREW INSTALLATION NOTES:

1. *Maintain a minimum 5/8" edge distance, 1" end distance, & 1" o.c. spacing of wood screws to prevent the splitting of wood.*

Documents Prepared By:
Lyndon F. Schmidt
P.E. No. 43409
RW BUILDING CONSULTANTS, INC.
P.O. Box 230, Valrico, FL 33595
Phone No.: 813.659.9197
FBPE Registry No. 9813

PRODUCT: STEVES & SONS FIBERGLASS DOOR

PART OR ASSEMBLY: BILL OF MATERIALS & COMPONENTS

NO.	DATE	REVISIONS	BY

DATE: 10/08/25
SCALE: N.T.S.
DWG. BY: RW
CHK. BY: LFS
DRAWING NO.: FL-46124.1
SHEET 9 OF 9

© 2025 R.W. BUILDING CONSULTANTS INC.

Z:\2023 FBC Drawings\Steves & Sons\FL-46124\FL46124.1.dwg